Crimp contacts

Crimp contacts 5A-Standard, for HM, EMC-008, D-SUB, HR23 inserts.

Contact resistance ≤ 3mΩ

silver plated

gold plated

Male	Order No.	Female	Order No.
CSSM-0.25	101 014 110 0101	CSSF-0.25	101 014 120 0101
CSSM-0.33	101 014 110 0201	CSSF-0.33	101 014 120 0201
CSSM-0.52	101 014 110 0501	CSSF-0.52	101 014 120 0501
CSSM-0.82	101 014 110 0701	CSSF-0.82	101 014 120 0701
CSGM-0.25	101 014 210 0101	CSGF-0.25	101 014 220 0101
CSGM-0.33	101 014 210 0201	CSGF-0.33	101 014 220 0201
CSGM-0.52	101 014 210 0501	CSGF-0.52	101 014 220 0501
CSGM-0.82	101 014 210 0701	CSGF-0.82	101 014 220 0701

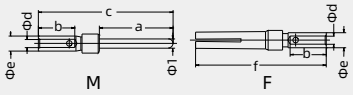

a	b	c	d	e	f
8.10	4.0	14.8	0.64	1.66	14.4
8.10	4.0	14.8	0.90	1.66	14.4
8.10	4.0	14.8	1.12	1.66	14.4
8.23	4.0	14.8	1.35	1.75	14.4

Wire gauge		Stripping length
0.09-0.25 mm²	AWG 28-24	5 mm
0.13-0.33 mm²	AWG 26-22	5 mm
0.33-0.52 mm²	AWG 22-20	5 mm
0.52-0.82 mm²	AWG 22-18	5 mm

Stamped contacts 5A

Contact resistance ≤ 10mΩ

silver plated

gold plated

coil stock

Note: 10kpcs/ volume

Wire gauge	Contacts	Female	Order No.
0.09-0.82mm²	male	CSSM-0.82P	101 014 110 0750
	female	CSSF-0.82P	101 014 120 0750
0.09-0.82mm²	male	CSGM-0.82P	101 014 210 0750
	female	CSGF-0.82P	101 014 220 0750

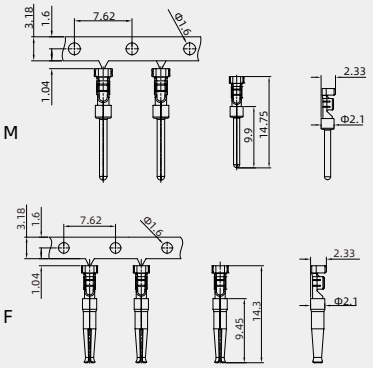

Crimp contacts 10A-Standard, for HD, HDD, HM, HK, HQ inserts.

Contact resistance ≤ 3mΩ

silver plated

gold plated

Male	Order No.	Female	Order No.
CDSM-0.25	101 017 110 0101	CDSF-0.25	101 017 120 0101
CDSM-0.37	101 017 110 0301	CDSF-0.37	101 017 120 0301
CDSM-0.50	101 017 110 0401	CDSF-0.50	101 017 120 0401
CDSM-0.75	101 017 110 0601	CDSF-0.75	101 017 120 0601
CDSM-1.0	101 017 110 0801	CDSF-1.0	101 017 120 0801
CDSM-1.5	101 017 110 0901	CDSF-1.5	101 017 120 0901
CDSM-2.5	101 017 110 1001	CDSF-2.5	101 017 120 1001
CDGM-0.25	101 017 210 0101	CDGF-0.25	101 017 220 0101
CDGM-0.37	101 017 210 0301	CDGF-0.37	101 017 220 0301
CDGM-0.50	101 017 210 0401	CDGF-0.50	101 017 220 0401
CDGM-0.75	101 017 210 0601	CDGF-0.75	101 017 220 0601
CDGM-1.0	101 017 210 0801	CDGF-1.0	101 017 220 0801
CDGM-1.5	101 017 210 0901	CDGF-1.5	101 017 220 0901
CDGM-2.5	101 017 210 1001	CDGF-2.5	101 017 220 1001

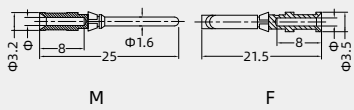

Wire gauge		Φ	Stripping length
0.09-0.25 mm²	AWG 28-24	0.65	5 mm
0.14-0.37 mm²	AWG 26-22	0.9	8 mm
0.5 mm²	AWG 20	1.1	8 mm
0.75 mm²	AWG 18	1.3	8 mm
1 mm²	AWG 18	1.45	8 mm
1.5 mm²	AWG 16	1.75	8 mm
2.5 mm²	AWG 14	2.25	6 mm

When the wire gauge is less than 0.75mm²,it's better to use the auxiliary pin assembly tool TL15.

Crimp contacts 10A-Enhanced Ⅰ (prevent deflected insertion), HD, HDD, HM, HK, HQ inserts.

Contact resistance ≤ 3mΩ

silver plated

gold plated

Male	Order No.	Female	Order No.
CDSM-0.37	101 017 110 0301	CDSF-0.37C	101 017 120 0306
CDSM-0.50	101 017 110 0401	CDSF-0.50C	101 017 120 0406
CDSM-0.75	101 017 110 0601	CDSF-0.75C	101 017 120 0606
CDSM-1.0	101 017 110 0801	CDSF-1.0C	101 017 120 0806
CDSM-1.5	101 017 110 0901	CDSF-1.5C	101 017 120 0906
CDSM-2.5	101 017 110 1001	CDSF-2.5C	101 017 120 1006
CDGM-0.37	101 017 210 0301	CDGF-0.37C	101 017 220 0306
CDGM-0.50	101 017 210 0401	CDGF-0.50C	101 017 220 0406
CDGM-0.75	101 017 210 0601	CDGF-0.75C	101 017 220 0606
CDGM-1.0	101 017 210 0801	CDGF-1.0C	101 017 220 0806
CDGM-1.5	101 017 210 0901	CDGF-1.5C	101 017 220 0906
CDGM-2.5	101 017 210 1001	CDGF-2.5C	101 017 220 1006

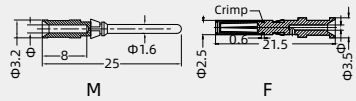

Wire gauge		Φ	Stripping length
0.14-0.37 mm²	AWG 26-22	0.9	8 mm
0.5 mm²	AWG 20	1.15	8 mm
0.75 mm²	AWG 18	1.3	8 mm
1 mm²	AWG 18	1.45	8 mm
1.5 mm²	AWG 16	1.75	8 mm
2.5 mm²	AWG 14	2.25	6 mm

When the wire gauge is less than 0.75mm²,it's better to use the auxiliary pin assembly tool TL15.

Notes: The tools for crimp terminal may influence the product quality and stability. Please select the tools recognized by our company.